Uncontrolled Copy

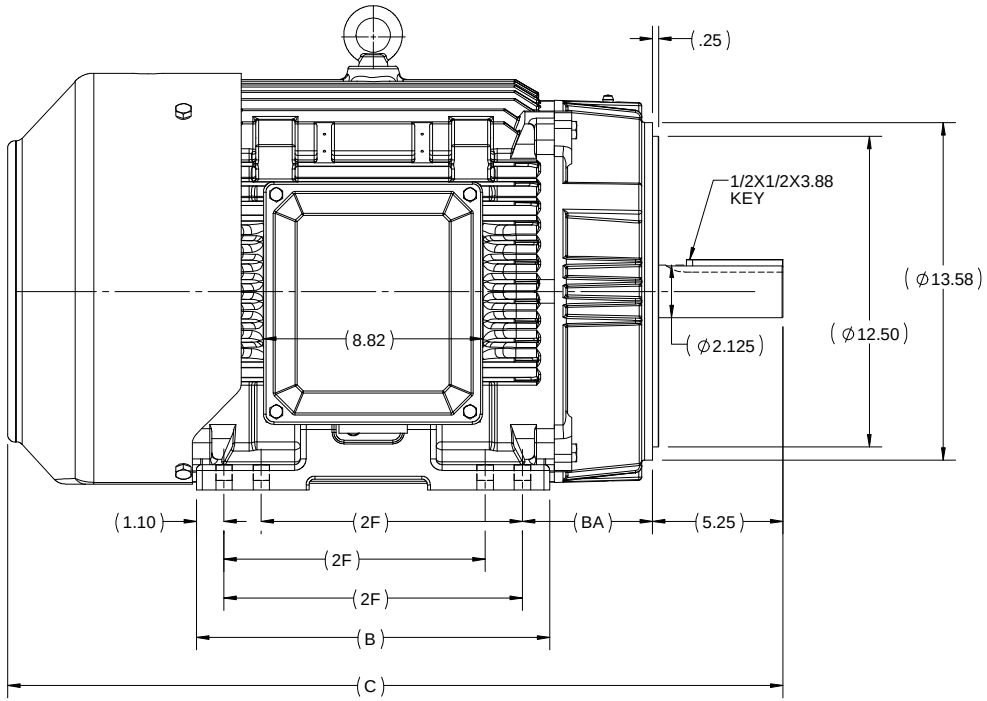

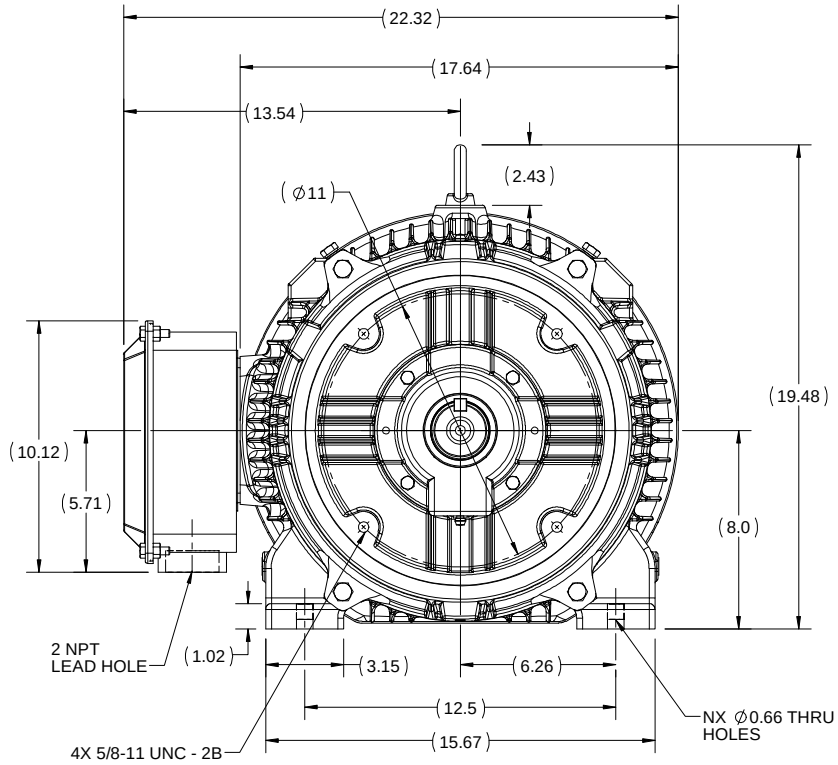

326TC	14.21	31.19	12.0	8	5.25
324TC	12.71	29.69	10.5	4	5.25
FRAME	B	C	2F	N	BA

DRAWING REVISION B	REVISION BY S.MUDDA	DATE 22/8/2018
ECO ECO-0151027	APPROVED BY JAY	DATE 22/8/2018

ECO DESCRIPTION
OUTLINE UPDATED AS PER NEW 3D STRUCTURING

COPYRIGHT REGAL BELOIT AMERICA, INC. ALL RIGHTS RESERVED.
PROPRIETARY AND CONFIDENTIAL INFORMATION - THIS DOCUMENT IS THE PROPERTY OF REGAL BELOIT AMERICA, INC. ("OWNER") AND CONTAINS OWNER'S PROPRIETARY INFORMATION. ANY PERSON, CORPORATION OR OTHER FIRM RECEIVING IT IS DEEMED, BY RECEIVING IT, TO AGREE THAT IT, AND/OR ANY PART OF IT, SHALL NOT BE DISCLOSED TO ANY PERSON, CORPORATION OR OTHER ENTITY, DUPLICATED, AND/OR USED, EXCEPT AS EXPRESSLY APPROVED IN WRITING IN ADVANCE BY OWNER. THIS DOCUMENT SHALL BE RETURNED TO OWNER UPON REQUEST. IT MAY BE SUBJECT TO CERTAIN RESTRICTIONS UNDER APPLICABLE EXPORT CONTROL LAWS AND REGULATIONS.

DRAWN BY NIV	REGAL™ Regal Beloit America, Inc.	
DATE 29/03/2016		
APPROVED BY SBD	DESCRIPTION OUTLINE 320TC FR-TEFC	
DATE 29/03/2016		
REFERENCE	MATERIAL	PROCESS/FINISH
THIRD ANGLE PROJECTION	SIZE B / DRAWING NUMBER SS312784	SHEET 1 OF 1